Y. Ikeda, C. M. Herr, D. Holzer, S. Kaijima, M. J. Kim. M, A, Schnabel (eds.), *Emerging Experience in Past, Present and Future of Digital Architecture, Proceedings of the 20th International Conference of the Association for Computer-Aided Architectural Design Research in Asia CAADRIA* 2015, 683–692.

DESIGN COGNITION SHIFT FROM CRAFTSMAN TO DIGITAL MAKER

SHANI SHARIF[1] and T. RUSSELL GENTRY[2]
[1,2] *Georgia Institute of Technology, Atlanta, USA*
shani@gatech.edu
russell.gentry@coa.gatech.edu

Abstract. The process of design and fabrication involves a complex cognitive activity, in which the human brain is part of a larger cognitive system that encompasses brain, body, tool, material and environment. In this system the cognition resides in the interaction of all these elements one with another in different stages of a design and making activity. This paper investigates the intermediary role of digital fabrication machines in changing the discourse of design cognition in relation to the action of making, inquiring into the diverging path from traditional craftwork. This research is shaped around the concept of transparent machine tools for an interactive participation in the process of design-making, shaping a human-machine interaction to unify the design and fabrication process.

Keywords. Digital fabrication; crafts; design cognition; distributed cognition; embodiment.

1. Introduction

Fabrication centric design processes, like any other creative endeavor, involve cognitive activities for the development of innovative and meaningful products addressing design problems. This design-thinking framework that emphasizes both aesthetic and functional aspects of a design has a long history, which spans from traditional craftworks, to the Bauhaus method in the early periods of Modernism in architecture (Celani, 2012), and to the current digital fabrication movement with an emphasis on the fabrication and material properties as generative and integrating design factors (Menges, 2012a). Recent research in the field of computational design calls for the new possibilities and potentials for human and machine interactions as complementing

collaborators in design-making processes, intending to unify design and fabrication process and closing the divide between the act of designing and making that was initially introduced by the intermediary role of Computer Numerical Controlled (CNC) machines. As Gramazio and Kohler (2010) argue: "Achieving a sophisticated building component … can be compared to methods used by manufacturers from pre-industrialised ages. Despite the similarities, today the action of material handling is indirect through the use of CNC machines as opposed to the instant feedback about the work in progress the skilled manufacturer received through the tool in his hand. With CAM, the tool is controlled through explicit routing data, which leaves no room for interpretation and adaptation."

Highlighting this gap, some studies have proposed the development of new interfaces for integration of physical and digital environments by augmenting actuators with sensors to incorporate the real time feedback on material state over the production process in the design (Mueller et al., 2012; Willis et al., 2011; Raspall et al., 2014; Johns et al., 2014). Realizing this goal requires a better understanding of the nature of cognitive activities involved in the process of digital design-making, which can benefit from inquiring into the diverging path from the traditional craftwork (Keller and Keller, 1993; O'Connor, 2006; Malafouris, 2004). The required factors for the effective and comprehensive integration of design and making can be studied based on the recent premise of cognitive science that defines cognition as a distributed processing system in which brain, body, tool, material, product, and social and material context are closely related and interact with one another in any cognitive activity (Malafouris, 2004).

This research outlines the distributed cognition theory and adapts its concepts for the analysis of interaction between design conception and the act of production. These concepts are first discussed in the realm of craftworks and then expanded into digital design and fabrication. As an indispensable part of the argument, the role of tools of production in the formation of designer's cognitive system is discussed, and the concept of "transparent" tools (Clark, 2004; McCullough, 1998; Norman, 1998) as the basis for the development of interactive CNC and robotic technologies is proposed. Finally, the function of feedback systems in the development of transparent and intelligent fabrication systems is assessed.

2. Distributed Cognition

Following the development of artificial intelligence concepts in the 1960's, the dominant view in the study of human cognition was to conceptualize brain and mind on analogy with computer hardware and computer programs, as disembodied and detached structures from the material world

(Malafouris, 2004). However, the new premise of cognitive science focuses on the development of human cognition in the embodied world, and beyond the mere activities that happen inside the brain of an individual. In this view, material environment is part of the cognitive system and as Ed Hutchins describes: "Cognitive activity is sometimes situated in the material world in such a way that the environment is a computational medium" (Hutchins, 2000). Different theories in this school of cognitive science address different aspects of the issue, cognition theories including: embodied, situated, distributed, mediated, and extended (Malafouris, 2004; Nersessian, 2008).

By investigating the organization of the cognitive process involved in the process of design-making, this research focuses on the concepts of distributed cognition theory, as they provide plausible explanations required for the analysis of digital designer-maker's cognitive process. In the distributed cognition framework, the involved mechanisms in the cognitive processes are studied beyond those that happen inside the brain of an individual. This theory emphasizes that all the cognitive activities, including design and fabrication, are in close relation to embodied action, representing a dynamic coupling between mind and matter (Hollan et al., 2000; Malafouris, 2004). In other words, cognition is not limited to the mind as a passive representational system that was portrayed by AI-influenced cognitive scientists, but rather the human cognitive system encompasses the complex and multi-scale coordination between internal (memory, attention, executive function) and external (material and environmental) structures (Hollan et al., 2000). In human cognitive system, the brain's role is to acts as a mediating component in a complex network of processes, which "continually loop between brain, body and technological environment" (Clark, 2001). Based on this framework, it can be argued that tools and materials of fabrication are an integral part of the design knowledge learning and creation process (Sharif, 2013).

3. Craftsman: Knowledge and Action in Tandem

In the last decades, the human-controlled tools in traditional production systems have transitioned to computer numerical controlled in digitally driven production systems. In both of these practices, brain, body, tool, material, product, and social and material contexts are in close collaboration. As Schön (1992) describes the design process involves a reflective conversation with the materials of a design situation. This section discusses the interdependent relationship between brain, body and the act of production, and the shift from human-controlled to numerical-controlled machines.

In artful craftwork, the craftsman is involved in an activity that requires knowledge and skill for making purposeful objects with hand. "Craft is habitual skilled practice with particular tools, materials, or media, for the pur-

pose of making increasingly well executed artefacts. Craft is the application of personal knowledge to the giving of form" (McCullough, 1998). Craftwork involves bodily activity, use of hand-controlled tools, and direct manipulation of materials. The craftsman is in control of the tools, either a hand-held tool such as chisels, and pliers, or more complex mechanical tools like milling machines. The result of the work is a unique artefact, the quality of which is highly dependent on the skill level of the craftsman.

In a study on the required knowledge for production of crafts, Keller and Keller (1993) argue that there is an inherent and dynamic interrelation between knowledge (of design and production) as the internal representation and action (of making) as the external representation in the accomplishment of any craftwork. In this framework, knowledge and action are integrated, simultaneously prerequisite and consequence of each other. Knowledge has both social and material aspects, and includes the internal image of the designed object or goal of production as well as the conceptualization of production sequence (Brereton, 2004). The craftsman's knowledge is derived selectively from prior production experiences and ideas about the world, based on the closest correspondence with the current design situation. However, the act of making, the produced material object, and the ongoing perception of this action transform and enrich the designer's prior organization of knowledge; as the designer's knowledge of a specific process is never adequately detailed and precise to predict all the possible situations and outcomes of the craftsman's action over the process of production. In addition, craftsman can never fully control his actions, as they are affected by materials, tools and environment conditions at each moment (O'Connor, 2006).

In each task, the craftsman should consider different criteria for production, including functional adequacy, aesthetic of design, techniques and procedures that involves tools and machines, financial constraints and material conditions. As Keller and Keller (1993) discuss "these dimensions operate as positive forces for action not determinants of outcome". The craftsman builds on conceptualizations, actions, and operations of similar previous production tasks as feedback, either successful or problematic, in order to establish a new production plan in mind. However, this pre-conception only initializes the task, and the design concept evolves concurrent with the craftsman's act of production and the received feedback from the evaluation of material and objective conditions of the work. The coevolution of design conception and artefact production is influenced by the under-constrained tools and material conditions that allows for creative development. In general, the ongoing development of the conceptual task is the source and the outcome of the materialization of the craftsman's actions (Figure 1).

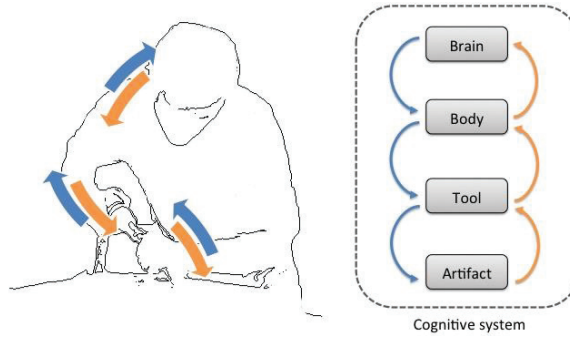

Figure 1. Representation of craftsman's cognitive system

4. Digital Maker: Smart Environments

The advances in digital technologies and specifically digital fabrication machinery and software tools have created the opportunity for integration of design, analysis, manufacturing, and the assembly in architecture, and the chance to reassess and potentially redefine the relationship between design and production (Kolarevic, 2004). As Oxman and Oxman (2010) emphasize "fabrication is a revolution in making of architecture", which "has a profound influence upon the definition of the requisite knowledge base of the architect". FabLabs in architecture schools have become the testbeds for development and assessment of new design and production knowledge (Gershenfeld, 2005; Celani, 2012; Valdes et al., 2013; Blikstein, 2013). As discussed earlier, one of the methods for understanding this requisite knowledge is by inquiring into the cognitive resources that mark the shift from traditional craftsman to digital maker. Consequently, investigating the cognitive synergy of knowledge and action in digital design-production processes calls for clarification of what we mean by digital fabrication and why it has become the growing approach in architectural design education.

Utilizing digital fabrication technologies, designers can probe into and evaluate their designed building components or full-scale building prototypes. The new tools provide new techniques for the production of building components out of commonly used or new construction materials. Specific characteristics distinguish digital fabrication from traditional craftwork. First, in a perfect case, there is a one to one mapping between a complete CAD-CAM model, fabricated physical model and anticipated actual building part. The digital model and physical prototype have almost all details, components and features of the final product with its all complexities and intricacies (Figure 2). Second, in the process of design, the designer must have an a priori vision, although immature, of how the actual final product is going to be made. This vision is based on designer's experience or projection, en-

hanced by the empowering computer modelling tools, and can be tested and improved through interaction with the machine and its interface, and development of physical models. Third, the digital fabrication machines allows for prototyping with the materials of production, such as metal, concrete or wood often at full scale, as opposed to model materials like chipboard or foam, which in return would provide the designer with process and material feedback on the design's weaknesses and strengths (Valdes et al., 2013). Forth, through digital fabrication processes the material logic is preserved. Rather than geometric form generation preceding the materialization, material properties can be used as generative factors in geometric form generation (Menges, 2012b). Fifth, in the design and fabrication of building parts, connections are the key: either the connection between parts made out of same material or parts with different materials or material combinations. The accurate design of connections based on the affordances and limitations of machines, fabrication methods and material(s) properties with consideration of tolerances can provide seamless attachments in the final assembly. Finally, digital fabrication allows for increases in speed, scale, precision, and complexity and provides the opportunity for repetition and production of multiple instances of a same object. It can be concluded that digital fabrication technologies are getting us closer to the reality of a designer as a maker.

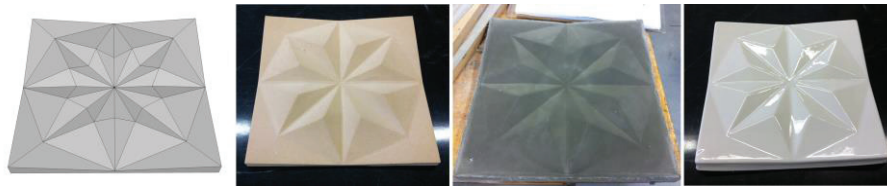

Figure 2. One to one mapping between 3D model and fabricated parts

6. Mind and Tools: Closing the Loop

From an embodied and distributed cognition point of view, the digital fabrication tools should not only be able to produce precise, complex and elaborate products, but also have to perform effectively as a design to fabrication tool for digital designer-makers. As Clark (2001) states: "the true power and beauty of the brain's role is that it acts as a mediating factor in a variety of complex and iterated processes which continually loop between brain, body and technological environment. And it is this larger system which solves the problem". In both manual and digital fabrication domains, the technological environment would be comprised of tools and materials.

The CNC and robotic tools and the CAD/CAM systems that are currently adopted by designers were all originally developed for engineering product

industries (Kolarevic, 2004). These technologies have been developed for industrial mass production of components with known problems and processes, and predictable outcomes. Unlike the traditional craftwork where the craftsman initiates the design task only with the pre-conception of the design object and design process, permitted by the under-constrained fabrication setting; in the digital design and fabrication processes with a more constrained environment, the digital maker should have a comprehensive view of the design object and embed detailed design and machining data in the digital model before the start of the fabrication phase. As a result, the process of design to fabrication is mostly a one-directional workflow, starting from creation of a geometric CAD model, development of CAM model based on both geometric data and machining setting, transfer of machining data to CNC tools, setting up material on the machine, and executing the production of the final part by the machine. Although there are some levels of interactivity in the initial stages of CAD/CAM model development, after the start of the machining process, the designer would have no control over the process of fabrication (Figure 3).

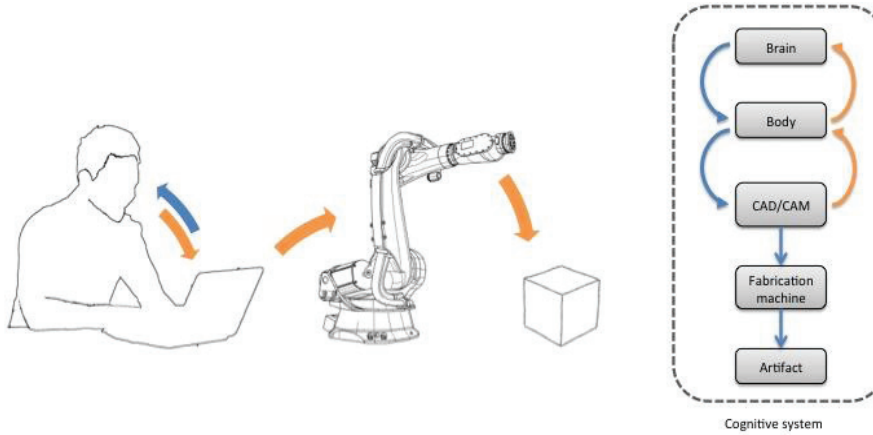

Figure 3. Digital Maker Cognitive System

This workflow of CNC technology that performs adequately and effectively in the industry does not provide much room for any concurrent and interactive creative or exploratory design/fabrication activity. While the design conception of digital maker affects the process of machining, no feedback during the action of making affects the organization and content of design. In addition, the process requires numerous disparate steps from design conception to physical production, which is not well suited to the capabilities of our biological brains for remembering "details of a lengthy sequence, or

to perform precise repetitions of actions" (Norman, 1998). In an ideal situation, the designer with qualitative consideration and machine with quantitative action should interact complementarily. However, most of the computer controlled tools, technologies and workflows at the current stage do not enable interactive processes to ultimately close the loop of brain, body, tool, and material environment for an effective creative cognitive systems.

Over the last couple of years, new research in both fields of engineering and design has identified the technological gap in the digital design and fabrication systems based on the complications in the last two decades of experimentations and investigations with the new technology, and consequently has called for the development of more intelligent CNC machines through improved human-computer interaction and augmented fabrication systems. On the one hand, in the field of engineering, a body of research investigates the interoperability, adaptability, and reconfigurability of CNC machines at the system level by developing a new CNC data model known as STEP-NC (Newman et al., 2008; Xu and Newman, 2006). Although these efforts will potentially result in more intelligent control systems and enhance the communication between the CAD, CAM, machine and material including automatic part setup, automatic and optimal tool path generation, accurate machining status and result feedback, and collision avoidance, they do not provide for the active engagement of the human designer in the system. On the other hand in the field of design, inaugurators such as Gramazio and Kohler call for complimentary act of human and machine as equivalent partners in a collaborative process (Gramazio et al., 2010; Gramazio and Kohler, 2008). In a project called Interlacing, researchers emphasize the need for enhancing the actuators, in this case robotic arms, with sensors to be "able to receive and execute commands at any time in real time, instead of executing a set of predefined orders" (Dörfler et al., 2013). Johns, Kilian and Foley propose the concept of "informed operator fabrication" where computer numerical control should provide information to both operator as well as instructions to the machine (Johns et al., 2014). In another project, researchers investigate the role of active material feedback for unpredictable material conditions while working with materials such as concrete or clay, as the relation between geometric information and the actual material is not consistent in these material systems (Raspall et al., 2014).

The research cited provides visionary ideas for the field of integrated human-machine design and fabrication; however, each of these projects is focused on a specific aspect of the problem and investigates a discrete type of feedback into the system. Much of the feedback– while directly working with material with human-controlled tools and machines – has the nature of tacit knowledge. Knowledge of design for creative and decision-making pro-

cesses, can be categorized in two types, explicit and tacit knowledge (Nonaka and Konno, 2005; Eraut, 2000). While explicit knowledge can be represented in words and numbers, and communicated with other people systematically through data, scientific formulae, specifications, or manuals; tacit knowledge constitutes informal personal skills, and is difficult to be expressed, formalized or shared with others (Nonaka and Konno, 2005). Both tacit and explicit knowledge have important roles in the design-making process development. The explicit knowledge of design is necessary for direct exchange of ideas, shared through descriptions, written instructions, tools demonstrations, and user manuals. The tacit knowledge is more personal and is gained through observation, induction and participation rather than formal inquiry (Eraut, 2000). While makers' knowledge in working with material has a tacit nature, for the computer-controlled tools this knowledge has to be or translated into explicit information so that they can receive these data, process and feedback it into system. The future CNC machines have to assist the designers in explorations and creativity, a smart cooperator in the design to fabrication processes.

7. Conclusion

This paper studied the cognition shift from traditional craftwork to digital fabrication production process in the light of distributed cognition theory, which studies cognitive activities beyond the brain of an individual and encompassing the material and environmental context. In this definition of cognition, tools become the extension of human brains and bodies, and are more efficient and integrated with the cognitive system while they are used without conscious thought, focusing the attention of the user on the material. Thus the digital fabrication tools have to be involved in the interaction between knowledge and embodied action. The computer-controlled machines of the future will be equipped with adaptive and interactive systems to be able to cooperate with human designers' "plastic brains" (Clark, 2004), and actively engage in the process of design and making.

References

Blikstein, P.: 2013, Digital Fabrication and 'Making'in Education: The Democratization of Invention, *FabLabs: Of Machines, Makers and Inventors,* 1-21.

Brereton, M.: 2004, Distributed cognition in engineering design: Negotiating between abstract and material representations, *Design representation,* 83-103.

Celani, G.: 2012, Digital Fabrication Laboratories: Pedagogy and Impacts on Architectural Education, *Nexus Network Journal,* **14**(3)**,** 469-482.

Clark, A.: 2001, Natural-born cyborgs? *Cognitive Technology: Instruments of Mind.* Springer.

Clark, A.: 2004, *Natural-born cyborgs: Minds, technologies, and the future of human intelligence*, Oxford University Press.

Dörfler, K., Rist, F. and Rust, R.: 2013, Interlacing: An experimental approach to integrating digital and physical design methods, *Rob| Arch,* Springer.

Eraut, M.: 2000, Non ‐ formal learning and tacit knowledge in professional work, *British Journal of Educational Psychology,* **70**(1)**,** 113-136.

Gershenfeld, N.: 2005, *Fab: the coming revolution on your desktop--from personal computers to personal fabrication*, Basic Books.

Gramazio, F. and Kohler,M.: 2008, *Digital materiality in architecture*, Lars Müller Publishers

Gramazio, F., Kohler, M. and Oesterle, S.: 2010, Encoding material, *AD,* **80**(4)**,** 108-115.

Hollan, J., Hutchins, E. and Kirsh, D.: 2000, Distributed cognition: toward a new foundation for human-computer interaction research, *ACM (TOCHI),* **7**(2)**,** 174-196.

Hutchins, E.: 2000, Distributed cognition, *Internacional Enciclopedia of the Social and Behavioral Sciences*.

Johns, R. L., Kilian, A. and Foley, N.: 2014, Design Approaches Through Augmented Materiality and Embodied Computation, *Robotic Fabrication,* Springer.

Keller, C. M. and Keller, J. D.: 1993, Thinking and acting with iron. *In:* Chaiklin, S. & Lave, J. (eds.) *Understanding practice: Perspectives on activity and context.*

Kolarevic, B.: 2004, *Architecture in the digital age*, Taylor & Francis.

Malafouris, L.: 2004, The cognitive basis of material engagement: where brain, body and culture conflate, *In: Rethinking materiality,* McDonald Institute for Archaeological Research.

McCullough, M.: 1998, *Abstracting craft: The practiced digital hand*: MIT press.

Menges, A., 2012a: Material computation: Higher integration in morphogenetic design, *Architectural Design,* **82**(2)**,** 14-21.

Menges, A.: 2012b, Material Resourcefulness: Activating Material Information in Computational Design, *Architectural Design,* **82**(2)**,** 34-43.

Mueller, S., Lopes, P. and Baudisch, P.: 2012, Interactive construction: interactive fabrication of functional mechanical devices, 25th ACM symposium, ACM, 599-606.

Nersessian, N.: 2008, *Creating scientific concepts*, The MIT Press.

Newman, S. and Nassehi, A.: 2008, Strategic advantages of interoperability for global manufacturing using CNC technology, *Robotics and Computer-Integrated Manufacturing,* **24**(6).

Nonaka, I. and Konno, N.: 2005, The Concept of "Ba": Building a Foundation for Knowledge Creation. *In:* Nonaka, I. (ed.) *Knowledge management,* Routledge.

Norman, D. A.: 1998, Being Analog. *The invisible computer: why good products can fail, the personal computer is so complex, and information appliances are the solution,* MIT press.

O'Connor, E.: 2006, Glassblowing tools: Extending the body towards practical knowledge and informing a social world, *Qualitative sociology,* **29**(2)**,** 177-193.

Oxman, R. and Oxman, R.: 2010, New structuralism: design, engineering and architectural technologies, *Architectural Design,* **80**(4)**,** 14-23.

Raspall, F., Amtsberg, F. and Peters, S.: 2014, Material Feedback in Robotic Production, *Robotic Fabrication in Architecture, Art and Design,* Springer.

Schön, D. A.: 1992, Designing as reflective conversation with the materials of a design situation. *Knowledge-Based Systems,* **5**(1)**,** 3-14.

Sharif, S.: 2013, Material Cognition: Designer's Perception Of Material In A Creative Design Process, *SIGRADI,* Valparaiso, Chile.

Valdes, F., Cavieres, A. and Gentry, R.: 2013, A Process-Centric Approach for Teaching Digital Fabrication, *SIGRADI,* Valparaiso, Chile.

Willis, K. D., Xu, C., Wu, K.-J., Levin, G. and Gross, M. D.: 2011, Interactive fabrication: new interfaces for digital fabrication, Proceedings of the 5th TEI conference, ACM.

Xu, X. and Newman, S. T.: 2006, Making CNC machine tools more open, interoperable and intelligent—a review of the technologies, *Computers in Industry,* **57**(2)**,** 141-152.